Motorized Retractable Monitor With Nameplate And Microphone



Keywords

- *Ultra-narrow bezel*
- *Anti-glare treatment*
- *Power loop reduces cables under the table*
- *Auto calibration for microphone*
- *Independent movement for monitor and microphone*
- *Free nameplate software available*

CE
FCC





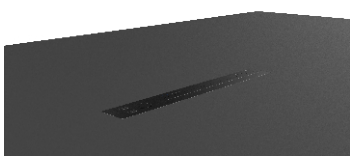

Thanks for choosing us,
Please read this instruction carefully before using the device.



Please remove the transportation screws in the back, right, left side of housing and protection foam of the screen before power up to avoid damage to the product!

In order to make sure the device is working properly, please follow below instructions:

- If found any abnormal situation, please cut off the power, plug off the power cord and contact the supplier. To avoid any fire accident, DON'T use device in following situations,
  - If peculiar smell found or fog comes from the product
  - If water or metal parts get inside the product
  - If the housing is deformed or damaged
  - If internal wire is broken

- As the device is high voltage, please DON'T open the housing at random to avoid fire or electric shock.

- DON'T put any conducting liquid on top of the product, to avoid fire or electric shock.

- The product is I type, should be connected to ground.

Specification

AX-15MG

Display

screen size	15.6 inch
matrix type	IPS
resolution	1920*1080
brightness	400cd/㎡
contrast ratio	800:1
aspect ratio	16:9
view angle	85/85/85/85
backlight lifespan	30000 hours
response time (if any)	30(Typ.)(Tr+Td)ms
screen tilt	0-25° motorized adjustable
touch (if any)	10 point capacity

Nameplate

screen size	10.1 inch
resolution	1024*600
brightness	300cd/㎡

Microphone

compatible	Televic/Bosch/Sennheiser Shure/Audio-Technica subject to order

Above specifications are subject to change without prior notice, explanation right reserved.

Specification

AX-15MG

Electronical

signal input	HDMI+HDMI
data input	USB 3.0
touch input (if any)	USB touch
terminal block	PC switch+signal switch
protocol	RS485
power supply	AC 220V 50Hz
power consumption	<60W
power loop	600W max.

Mechanism

cover plate	anodized aluminium
finishing	black/silver, matt/brushed customization available
G.W.	18.5kgs
packing dimension	825*730*190mm
temperature	working 0℃～+50℃, storage -20℃～+60℃
humidity	working ≤90%, storage ≤90%

Accessory

power cord	RS485 control cable

Control

manual	RS485

Above specifications are subject to change without prior notice,
explanation right reserved.

Cover plate

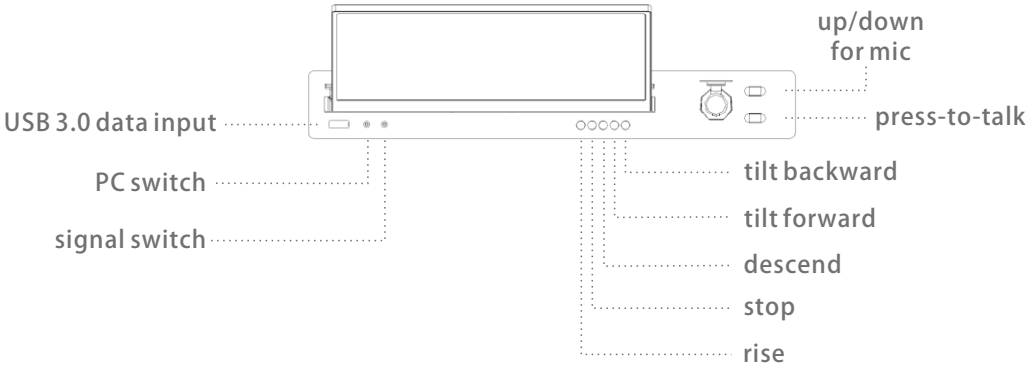

Connectors on the housing

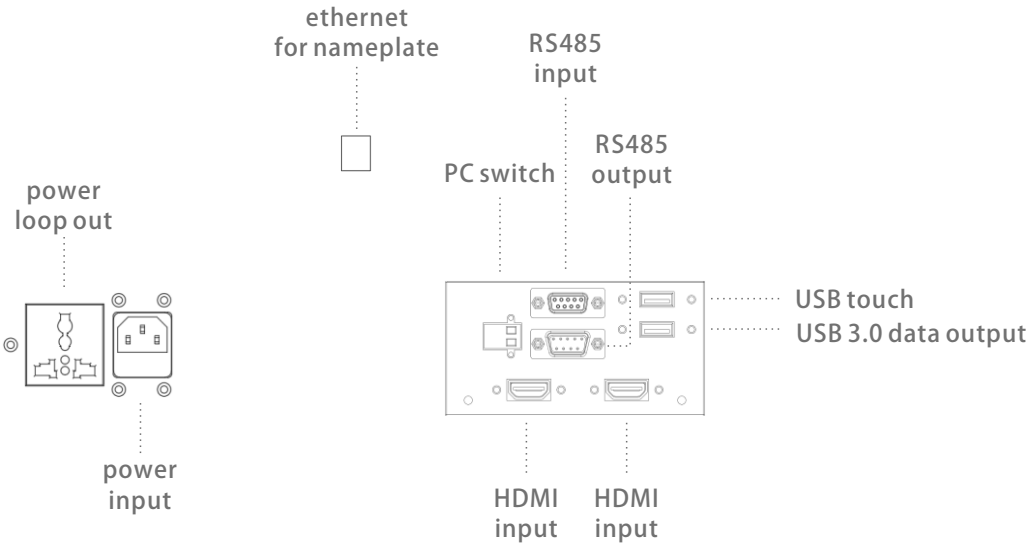

Warranty

1 year by default, effective from delivery date
price increase 3% when extend to 2years
price increase 5% when extend to 3years
price increase 10% when extend to 5years

Dimensions

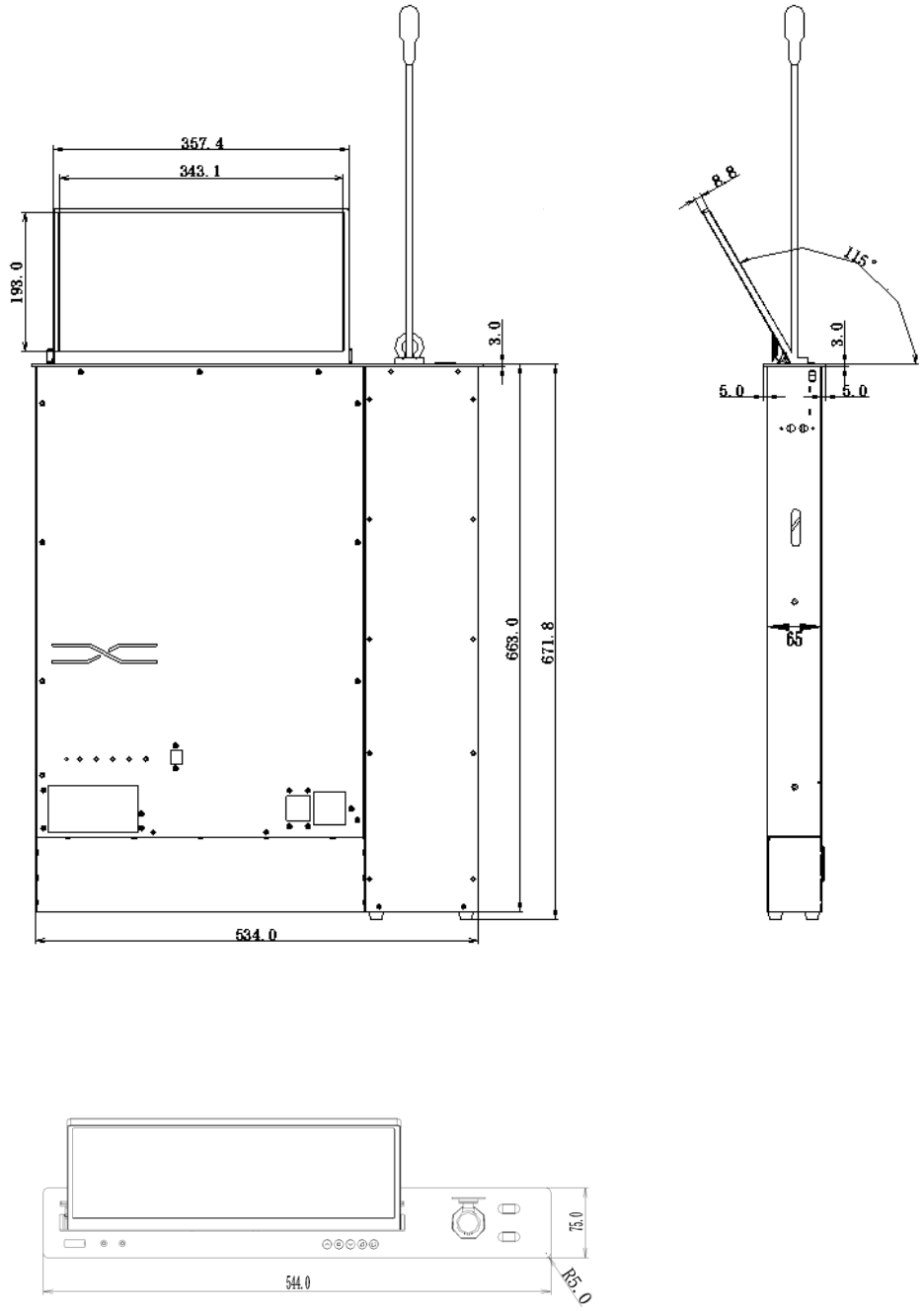

Above dimensions for reference and subject to change, please double confirm.

Control codes

Hexadecimal control demand codes, RS485 protocol
Control port definition:1 for 485+ ; 2 for 485- ; 5 for grounding

Baud rate: 4800
Data bit: 8
Parity bit: NONE
Stop bit: 1

When control all the units, no need to reset ID for each device, please use below codes

rise all	FF AC E1 FF 00 00 DD 01 DC
stop all	FF AC E1 FF 00 00 CD 01 CC
descend all	FF AC E1 FF 00 00 ED 01 EC

During central control programming, please send below codes by keep pressing without break

tilt forward for all	FF AC E1 FF 00 00 1D 01 1C
tilt backward for all	FF AC E1 FF 00 00 2D 01 2C

When control the units in groups(15 max.), use below codes after deviding the units into several groups

group #1	
rise	FF AC E1 E1 00 00 DD 01 BE
stop	FF AC E1 E1 00 00 CD 01 AE
descend	FF AC E1 E1 00 00 ED 01 CE
tilt forward	FF AC E1 E1 00 00 1D 00 FE
tilt backward	FF AC E1 E1 00 00 2D 01 0E
group #2	
rise	FF AC E1 E2 00 00 DD 01 BF
stop	FF AC E1 E2 00 00 CD 01 AF
descend	FF AC E1 E2 00 00 ED 01 CF
tilt forward	FF AC E1 E2 00 00 1D 00 FF
tilt backward	FF AC E1 E2 00 00 2D 01 0F
group #3	
rise	FF AC E1 E3 00 00 DD 01 C0
stop	FF AC E1 E3 00 00 CD 01 B0
descend	FF AC E1 E3 00 00 ED 01 D0
tilt forward	FF AC E1 E3 00 00 1D 01 00
tilt backward	FF AC E1 E3 00 00 2D 01 10
group #4	
rise	FF AC E1 E4 00 00 DD 01 C1
stop	FF AC E1 E4 00 00 CD 01 B1
descend	FF AC E1 E4 00 00 ED 01 D1
tilt forward	FF AC E1 E4 00 00 1D 01 01
tilt backward	FF AC E1 E4 00 00 2D 01 11